Elva Open 33 2026-01-10 Elva MU16-73

Competitors: 7

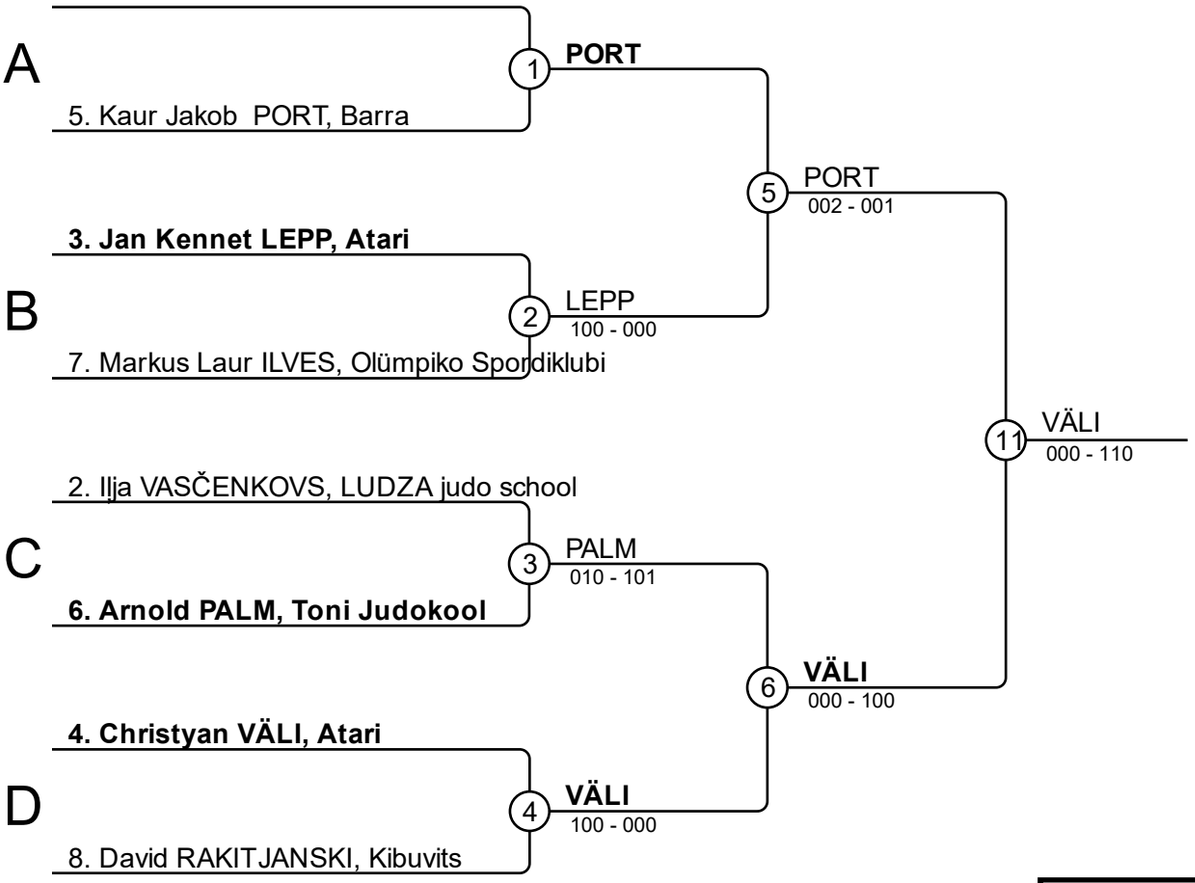

Results
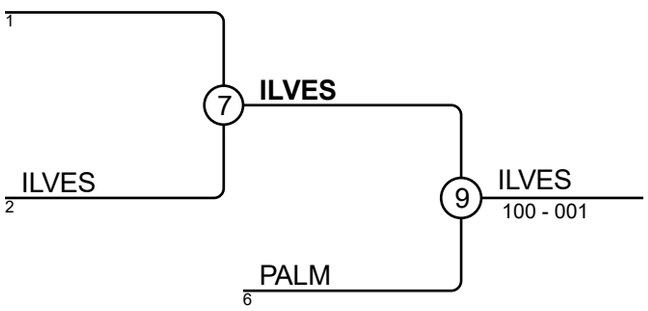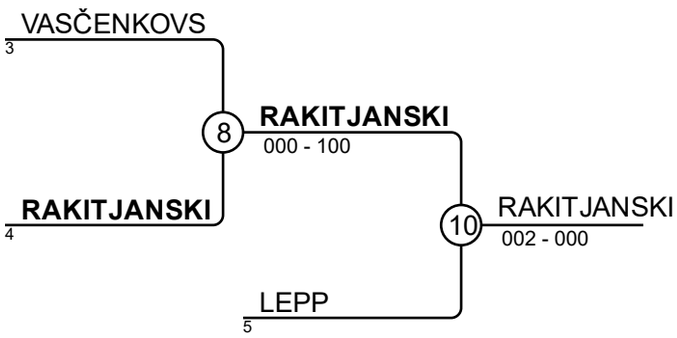
Pos	Name
1	Christyan VÄLI, Atari
2	Kaur Jakob PORT, Barra
3	Markus Laur ILVES, Olümpiko Spordi
3	David RAKITJANSKI, Kibuvits
5	Arnold PALM, Toni Judokool
5	Jan Kennet LEPP, Atari
7	
7	Ilja VASČENKOVS, LUDZA judo scho